Models - 9420 “P” Series Digital Air Vac Models

PRODUCT INFORMATION

Please take a moment to fill out the information below in order to aid us with any future sales or service inquiries. Model number and serial number information can be found on the serial tag located inside the control box and/or on the lower exterior of the can. Key number can be found on the tag that comes attached to the keys. There may be more than one key number depending on unit.

Please keep this information with your records.

MODEL#:_____

SERIAL#:_____

KEY NUMBER(S):_____

DATE PURCHASED:_____

DISTRIBUTOR:_____

J.E. Adams Industries
1025 63rd Ave. S.W.
Cedar Rapids, IA 52404
1-800-553-8861
www.jeadams.com

Specifications

Unit specifications: Gast twin cylinder compressor models

Voltage: 120VAC, 60Hz

Amperage: (1) 20 amp service is required for this unit (air or vac will run depending on what function is chosen)

Weight: 240 lbs with pallet

Vac Motor: (2) 120VAC vacuum motor

Fuses: (2) 10 amp inline fuses (vac motors)

Compressor: Gast 3/4 HP, 120VAC, 60HZ

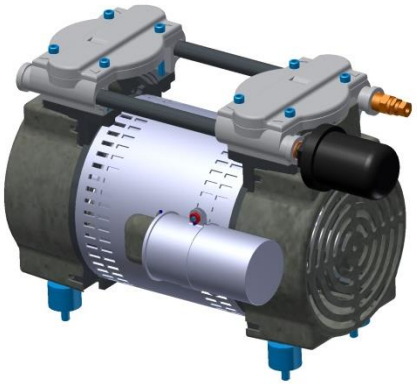

Twin cylinder compressor

Duty cycle time 4 minutes on, 4 minutes off.

NOTE: “UNIT INTENDED FOR COMMERCIAL USE ONLY”

IMPORTANT SAFETY INSTRUCTIONS

When using an electrical appliance, basic precautions should always be followed, including the following:

READ ALL INSTRUCTIONS BEFORE USING (THIS APPLIANCE)

WARNING – To reduce the risk of fire, electric shock, or injury:

- Do not use on wet surfaces.
- Use only as described in manual. Use only manufactures recommended attachments.
- Do not allow to be used as a toy. Close attention is necessary when used by or near children.
- Do not put any object into openings. Do not use with any opening blocked; keep free of dust, lint, hair and anything that may reduce air flow.
- Keep hair, loose clothing, fingers, and all parts of body away from openings and moving parts.
- Do not use to pick up flammable or combustible liquids, such as gasoline, or use in areas where they may be present.
- Do not pick up anything that is burning or smoking, such as cigarettes, matches, or hot ashes.
- Do not use without dust bag and/or filters in place.
- Never use air compressor on tires containing sealers such as “FIX-A-FLAT” type products!

SAVE THESE INSTRUCTIONS

- **Installation Instructions:**
- Determine location to mount unit (**“DANGER” “THIS EQUIPMENT INCORPORATES PARTS SUCH AS SWITCHES, MOTORS, OR THE LIKE THAT TEND TO PRODUCE ARCS OR SPARKS THAT CAN CAUSE AN EXPLOSION. WHEN LOCATED IN GASOLINE-DISPENSING AND SERVICE STATIONS INSTALL AND USE AT LEAST 20 FEET (6 M) HORIZONTALLY FROM THE EXTERIOR ENCLOSURE OF ANY DISPENSING PUMP AND AT LEAST 18 INCHES (450 MM) ABOVE A DRIVEWAY OR GROUND LEVEL.”**
- Run electrical service to that location
- **Grounding Instructions**: This appliance must be connected to a grounded metal, permanent wiring system; or an equipment-grounding conductor must be run with the circuit conductors and connected to the equipment-grounding terminal or lead on the appliance.
- **Circuit must be protected by GFCI device.**
- All local and national electric codes must be followed for installation and use.
- Licensed electricians are recommended for installation.

Product Dimensions

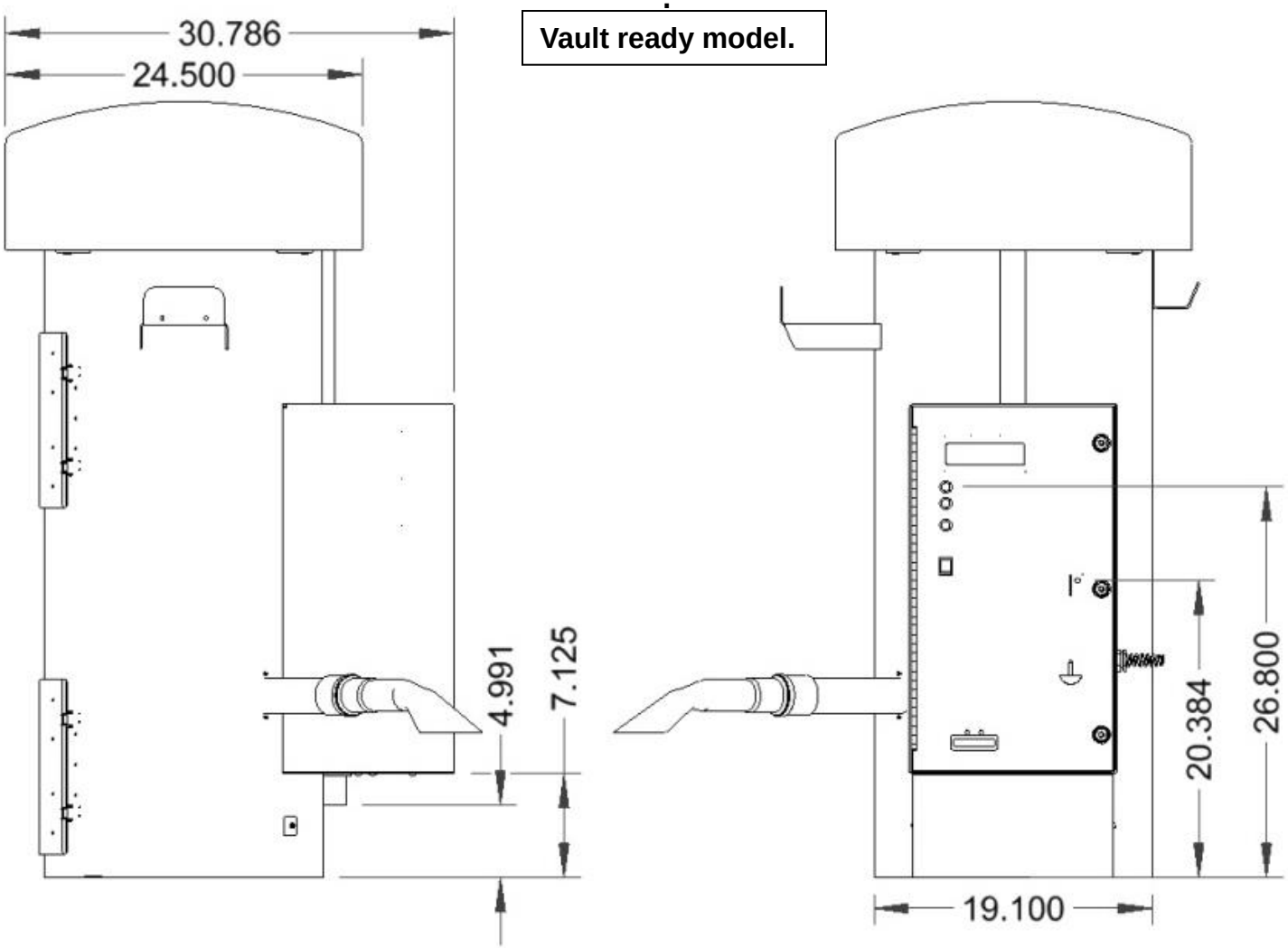

Product Dimensions

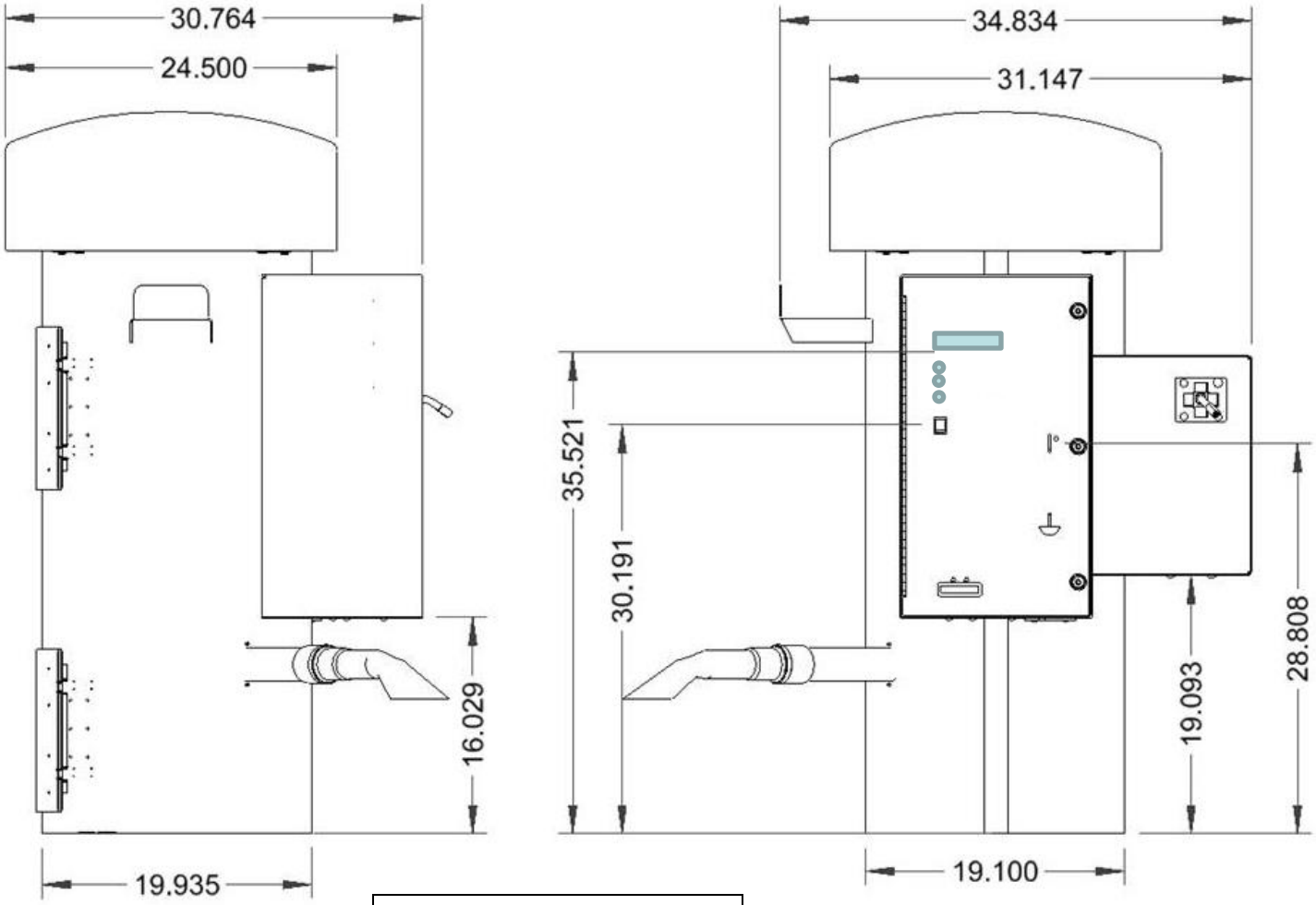

Side hose reel model.

Installation:

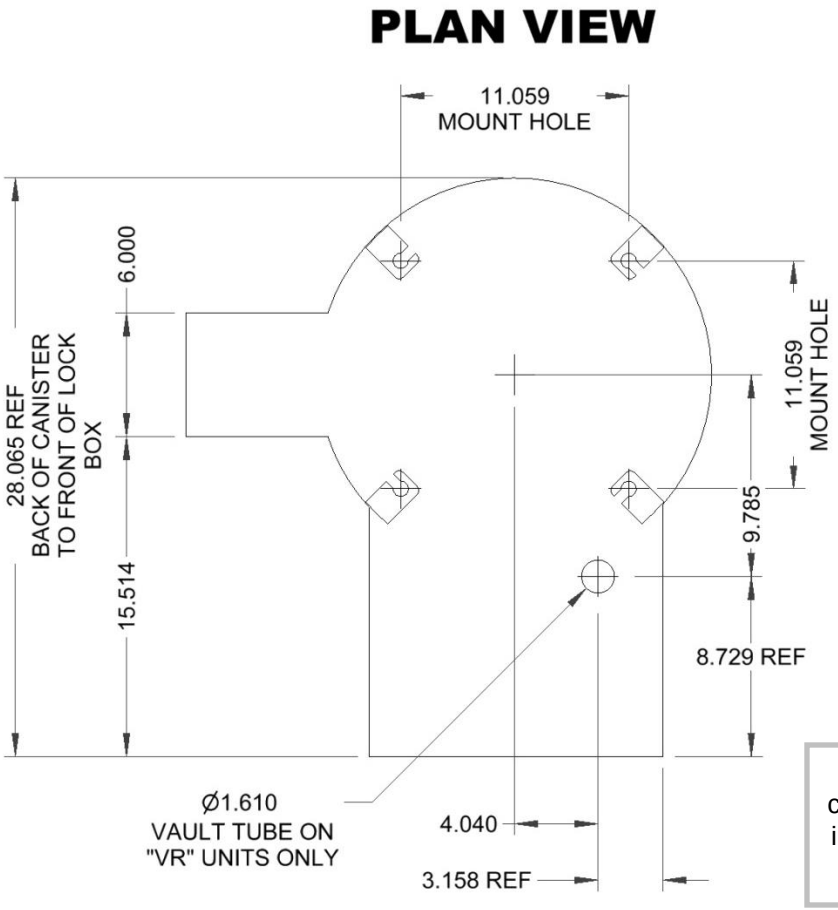

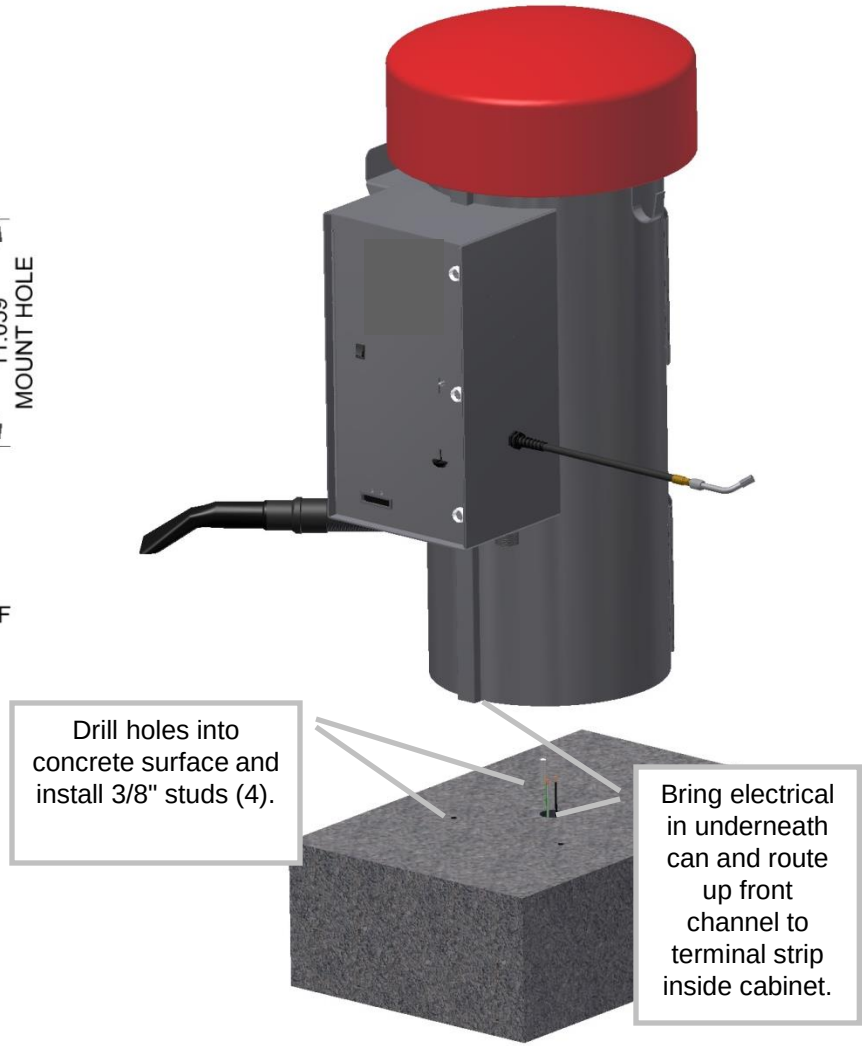

NOTE: when mounting, provide clearance so cleanout doors can open!!

Electrical:

Open door to digital air vac to access terminal strip.

NOTE: MACHINE SHOULD BE INSTALLED PER LOCAL/NATIONAL ELECTRICAL CODES BY QUALIFIED ELECTRICIAN.

Consult electrical diagram on last page of manual for specifics. Connect 120V white "neutral" here.

Consult electrical diagram on last page of manual for specifics. Connect 120V black "hot" here.

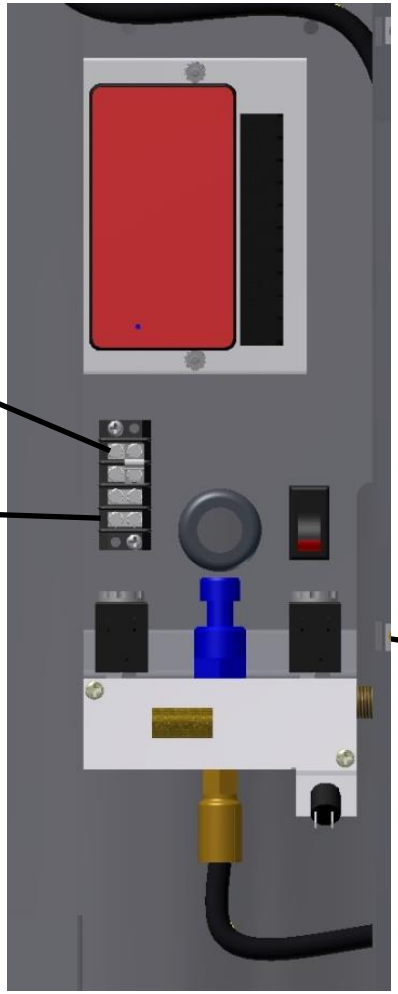

Consult electrical diagram on last page of manual for specifics. Connect green "ground" to bolt.

****Note: A true ground from electrical service must be applied to unit. Failure to use a true ground will result in erratic machine function and failure.****

Once unit has been installed use 5871B8 cap plugs (supplied with unit) to seal holes in canister bottom located in lower cleanout door. Extra cap plugs are included with the unit in case plug becomes damaged during shipping removal.

To attach hose, thread into metal hole counter clockwise.

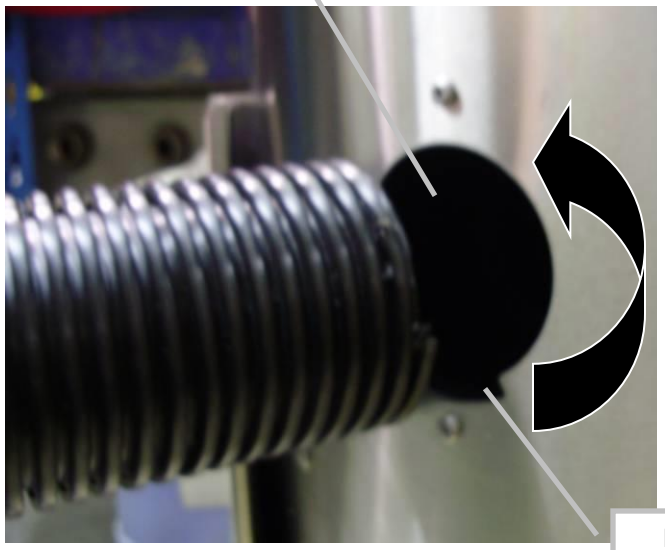

Edge of hose will need to start here.

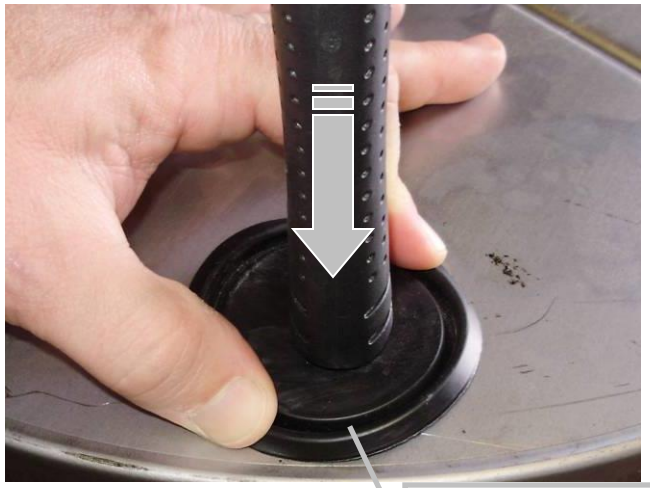

To insert 5871B8 cap plugs into bottom holes, pinch cap plug into place using index finger and thumb. With edges of plug resting against edges of hole, firmly push down on plug with end of hammer or other blunt object until plug snaps into place.

Programming Instructions:

Coin acceptor:

No programming to acceptor needed if unit was purchased with the standard Imonex Z3 acceptor (8149 JEA part number) as it is built accept US quarters. If different acceptor was purchased, see additional literature sent along with unit for programming info.

Bill acceptor:

Bill acceptor comes pre programmed from J.E. Adams and should not require any changes. If additional programming is needed to acceptors please refer to additional literature sent along with this unit.

Timer programming:

The 9215 series are available only with the IDX AT422 Series “Two-Timer.” The AT422 has a built in feature of two “coins to start” settings, plus two “time per coin” settings. For example, a location could program the vacuum feature for $.75 for 4 minutes and the air dryer for $1.25 for 4 minutes. If the end user would begin using the vacuum feature and later switch to the air dryer function, the IDX AT422 would automatically recalculate the remaining time to the higher priced feature.

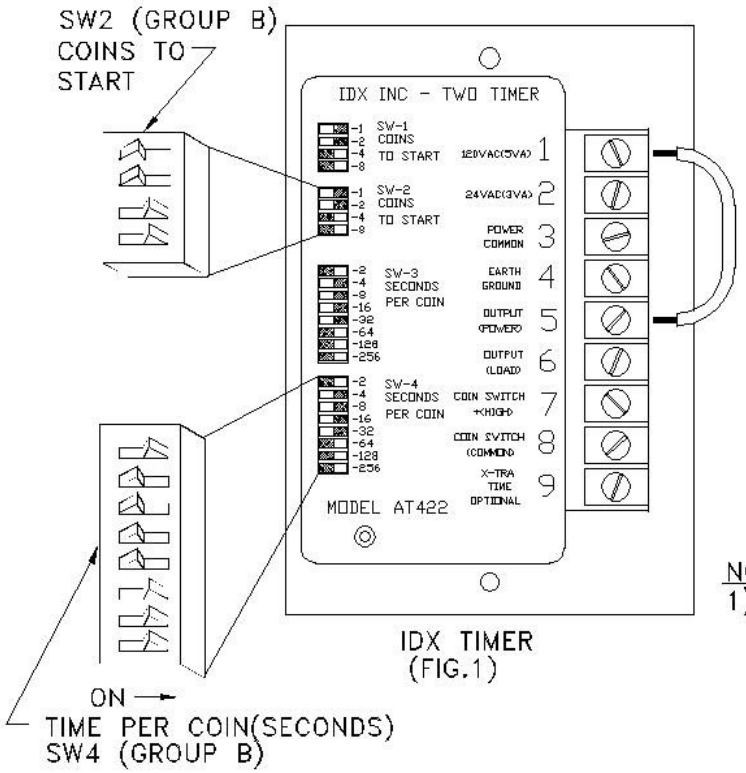

IDX TIMER
(FIG.1)

FEATURES:

- **-WILL CALCULATE THE REMAINING TIME DIFFERENCE INSTANTLY, SWITCHING FROM TIMER 1 (GROUP A) TO TIMER 2 (GROUP B).**
- **-1 TO 15 COINS TO START (SWITCH GROUP A & GROUP B).**
- **-ACCUMULATES TIME PER COIN (FOR BOTH GROUPS A & B).**
- **-SELECT GROUP A OR B BY USING TOGGLE SWITCH ON FACEPLATE.**
- **-SELECT COIN TIME FROM 2 SECONDS TO 8.5 MINUTES PER COIN.**
- **-SWITCH 1 & 3 ARE GROUP A.**
- **-SWITCH 2 &4 ARE GROUP B.**

NOTE:

1) IDX TIMERS ARE ACCUMULATING TIMERS, MEANING THAT DURING TIMING PERIOD TIME CAN BE EXTENDED PROPORTIONALLY BY ADDING MORE COINS.

Machine Operating Instructions:

- Read safety instructions on previous pages.
- Flip rocker switch to desired function and insert coins/dollar bills to start.
- Compressor or vacuum motors will then start.
- For vacuum motors, use vacuum to remove dry dirt and debris from car/truck.
- For air, set control panel to desired air pressure by using the + or – buttons; default is typically set at 32 PSI.
- Apply chuck to tire valve stem and wait for machine to alarm to indicate tire is full. NOTE: For best results, remove valve stem covers on all tires before depositing money.
- Hang hose(s) up when finished.

How Does Digital Air Work?

When the compressor is running, the machine will dispense air randomly out the chuck. It is searching for a back pressure from the tire. Once a back pressure is sensed, the machine will continually dispense air out the chuck until the tire is filled to the programmed pressure. If the tire does not have adequate air pressure in it (such as a low or flat tire scenario), the "flat tire" button on the control panel can be pressed which will make the digital air machine dispense air for a longer period of time before searching for a back pressure. If the digital air machine cannot fill a low tire, the tire probably needs serviced.

Maintenance:

- **All servicing of machine should be conducted by an authorized service representative!**
- Periodically inspect hose, chuck, and chuck washer for wear or fatigue.
- Every month remove filter from compressor and clean.
- Periodically inspect electrical wires and connections for wear or fatigue.
- Clean cabinet with a stainless steel cleaner as needed.
- Decals can be cleaned with mild soap and water.
- Replacement parts can be ordered through JE Adams or your nearest dealer.

DISCONNECT POWER BEFORE SERVICING OR TROUBLESHOOTING!

Troubleshooting:

Problem	Possible cause	Solution
Unit is not powered.	Breaker inside unit is not in the on position.	Flip breaker on.
	No power to machine.	Check incoming power.
	Loose connection.	Check incoming power connection.
Machine is behaving erratically.	Is the incoming power at 120V?	Check voltage and monitor while machine runs. Low voltage can cause erratic behavior.
	Are any of the machines wires worn through or connections not making contact?	Inspect wiring and connections. Look for sharp bends in wires and places where wire is against the metal chassis.
Unit keeps tripping breaker.	Inadequate wire size ran to machine.	Call electrician and install proper wire size for 20amp service versus length or run.
	Wrong size breaker.	Install correct breaker (only if wire size is adequate to handle 20 amp breaker).
Fuses for vac motors keep blowing.	Inadequate wire size ran to machine.	Call electrician and install proper wire size for 20amp service versus length or run.
	Motor brushes may be bad or too short.	Replace motor brushes.
Lack of vacuum suction.	Vac hose clogged?	Clean debris from vac hose.
	Filter bags need cleaned or dirt chamber needs emptied?	Shake or clean filter bags or replace and empty lower dirt chamber.
	Vac hose is split?	Replace/repair vac hose.
	Cleanout door gaskets torn or worn?	Replace gaskets.
	Vac motor gaskets are worn or motor is not tight against.	Inspect/replace gaskets and assure motor is tight against them.
	Lower chamber cap plugs/mounting hole covers have popped out?	Open lower chamber and inspect plugs, order new if needed.
	Cleanout door gaskets torn or worn?	Replace gaskets.
	One of the vac motors is not working?	Check line motor fuse and replace. Replace motor if necessary.

DISCONNECT POWER BEFORE SERVICING OR TROUBLESHOOTING!

Troubleshooting: Compressor runs but will not inflate tire.	Air is leaking from unit somewhere.	Turn power off to unit, apply chuck to air source with at least 30lbs of pressure and listen carefully for leaks inside cabinet or air hose. Replace faulty component if leaking.
	If no system leaks, is compressor putting out enough pressure?	If compressor cannot force air into tire, the compressor may have exceeded its life span and need rebuilt (about 1000 hours).

WHEN PERFORMING MAINTENANCE OR TROUBLE-SHOOTING, TURN POWER OFF! QUALIFIED PERSONNEL ONLY!

For additional trouble shooting for digital air see next three pages.

Caution! -lethal voltage is present in all compressed air vending machines. Repair should only be attempted by trained technicians. Note -Tests should be performed in order for proper diagnosis.

1.00 **Check for loose connections:**

Loose or broken wires can cause misleading symptoms. Check all connections before proceeding.

2.00 **Check AC power:**

The pressure regulator circuit board and solenoids operate from a 24VAC power transformer. The LCD display should have white LED back-lighting and the unit should indicate a 32 psi set point and 0 psi during idle mode. If the display fails this check, the board is most likely not receiving 24VAC power. If power is present at the 0.250” tab terminals, replace the digital pressure board and/or display.

3.00 **Adjust set point :**

Adjust the set point with the up and down buttons. The buzzer should beep with every adjustment.

3.01 **Potential faults if set point does not increment or decrement:**

Loose or broken push button wires
Push button
Digital pressure board

3.02 **Potential faults if the buzzer does not beep:**

Loose or broken buzzer wiring
Buzzer
Digital pressure board

4.00 **Read tire pressure :**

With the compressor off, attach the air chuck to a tire. The display should indicate the tire pressure. The buzzer should beep when stable pressure is detected. Note the pressure and remove the chuck. Measure the tire with an accurate hand-held tire gauge. Compare the two readings.

Note -stick gauges are notoriously inaccurate, use a quality instrument for this procedure. Make sure a good seal is achieved for each measurement. Any air escaping during this procedure will greatly affect accuracy. The test tire should be at 32 to 50 psi for best results.

4.01 **Potential faults if pressure is not within a few psi of measured tire pressure:**
Tire chuck
Leaks in fittings or hose
Loose or broken pressure sensor cable
Solenoid stuck open
Pressure sensor

Digital pressure board:

4.02 **Potential faults if pressure is within a few psi of measure tire pressure:**
Digital pressure board requires calibration
Faults listed under 4.01

5.00 **Calibration :**
Skip this step if tire accuracy is within acceptable limits.

Tools:
Michelin MN-12279 Tire Gauge recommended (displays pressure to 0.1 PSI resolution).
Notes:
Make sure the compressor is off before entering the calibration mode and remains off during the entire calibration process.

5.01 Press and hold the “PROGRAM” button on the digital pressure circuit board. After approximately 2 seconds, the buzzer will beep and "CAL" will be displayed. Release the button. The exhaust solenoid will be enabled for 2 seconds after which all of the display segments will be turned on to allow for visual inspection of the display. After an additional 3 seconds, the exhaust solenoid will be disabled and the display will show the pressure in 0.1 psi increments (example "P 0.3").
Note -during the time that all display segments are enabled, the pressure board is adjusting the pressure sensor input for 0 psi measurements. The pressure displayed initially will include any previously calculated offset.

5.02 Attach the air chuck to the tire until the unit starts beeping, indicating that the pressure reading is stable. Remove the air chuck from the tire (the captured pressure reading will continue to be displayed until the chuck is attached to the tire again). Measure the tire pressure with the Michelin tire gauge and press the up or down button so that the pressure displayed matches the pressure measured with the Michelin tire gauge.
Note -Make sure a good seal is achieved for each measurement. Any air escaping during this procedure will greatly affect accuracy. The test tire should be at 32 to 50 psi for best results.

5.03 **The calibration mode can be exited in one of three ways:**
1) Pressing the PROGRAM button for less than 2 seconds will exit the calibration mode without saving the new calibration values.
2) Holding the PROGRAM button for 2 seconds until the beeper starts beeping rapidly will save the new calibration values.
3) The pressure board will automatically exit calibration mode if no button is pressed or no change in pressure reading is detected for 60 seconds and the new calibration values will not be saved.

Tire inflation/deflation

6.01 Deposit the required number of quarters to activate the compressor. Adjust the set point to the desired tire pressure. Attach the tire chuck to the tire and verify a good seal is achieved. The digital pressure board should detect the tire and begin the process unless it is flat. Depressing the flat tire button will dispense air until the tire is detected.
The buzzer should beep several times when the tire pressure matches the set point.

6.02 **Potential faults during inflation/deflation test:**
Loose or broken solenoid wires
Current sensor cable
Leaks between compressor and manifold
Foreign debris in solenoid seal area
Solenoid
Weak compressor
Faulty over-pressure relief valve
Digital pressure board

PART NO 9420-1GDIGPVH

BILL OF MATERIALS

ITEM	PART NUMBER	DESCRIPTION	QTY
40	8057	MOTOR GASKET	2
41	8076	FILTER BAG	4
42	8081	CABLE TIE MOUNT	6
43	8084	CABLE TIE	33
44	8108	#10 x 1/2 TAP SCREW	2
45	8130-6	MEI MARS, 110V BILL VALIDATOR	1
46	8153-1	LATCH, CLEANOUT DOOR	4
47	8157	NUT, #6-32 KEPP NUT STAINLESS	4
48	8159	DOOR GASKET	2
49	8183	DECAL, WARN ING DISCONNECT POWER	2
50	8306	24" PLASTIC DOME	1
51	8427-1	DECAL CANISTER SIDE VAC	1
52	8427-2	DECAL CANISTER SIDE AIR	1
53	8437D001	ETL LISTED DECAL	1
54	8533-13	OPEN FLOW CHUCK	1
55	8545-4	30" HOSE ASSEMBLY	2
56	8615-5W	CLEANOUT DOOR WELDMENT	2
57	8670KIT602-03	PROTEL DIGI AIR KIT	1
58	8732	PRODUCT NAMEPLATE	1
59	8754	DECAL, WARNING	1
60	8939	PALLET	1
61	8958-1	MEDECO SCREW LOCK	2
62	9420-16A	CONTROL ASSEMBLY, PROTEL DIGI AIR/VAC	1
63	9420-7A-DIG	DOOR ASSY, DIGITAL AIR VAC	1
64	9420FPD-DIGP	DOOR DECAL, PROTEL DIGITAL AIR VAC	1
65	9421W9	DIG AIR/VAC CAN W/SIDE REEL	1
66	9862	COMPRESSOR, 3/4 HP TWIN CYL	1
67	B5722-002	LOCK NUT, 38"	1
70	5901D4	WIRE NUT, TWIST, 1X18 W 1X20-4X16GA, ORG	2
E 71	8055LEAD-EM	MOTOR LEAD, ELECTRO MOTOR	4
72	9500-56	CABLE ASY, BILL ACCEPTOR, 30" EXT.	1
E 73	B5997-001	FUSE HOLDER, W/LEADS, 300V	2
74	B5996-010	FUSE, GLR SERIES, 10A, 300VAC	2

BILL OF MATERIALS

ITEM	PART NUMBER	DESCRIPTION	QTY
1	2036	HOSE, 2" X 15' BLACK VACUUM	1
2	2058	CLAW/CUFF ASSEMBLY, 2"	1
3	29000-44W	VALIDATOR BOX WELDMENT	1
4	29000-45W	VALIDATOR FACEPLATE WELDMENT	1
5	29000-47W	COIN BOX ENCLOSURE WELDMENT	1
6	29000-52W	COIN BOX WELDMENT	1
7	29000-59	VALIDATOR FACEPLATE HANDLE	1
8	29029-12	COVER, VAULT HOLE	1
9	5035D3	DOWEL PIN	4
10	5600D2	5/16-18 x .75 CARR BOLT	2
11	5600D4	3/8-16 BOLT	4
12	5601D13	SCR,1/4-20x1/2 PPHSqConeStepZP	4
13	5603D1	10 Std NC Nylock Nut	2
14	5603D11	1/2 Std NF Nylock Nut	1
15	5603D2	1/4 Std NC Nylock Nut	12
16	5603D5	1/4 Std NC Nylock Nut	7
17	5603D9	Nut NYLOCK, #10-32	2
18	5606D22	3/8" FENDER WASHER	8
19	5611D4	NUT, 5/16-18 UNC KEPP- SS	2
20	5635D1	1/4-20x1/2 CARRIAGE BOLT	3
21	5635D4	*Varies*	4
22	5636D1	#10-24 PHIL. PAN HEAD SCREW	2
23	5639D1	RUBBER GROMMET	1
24	5644D1	CAGE NUT 5/16-18	4
25	5647D2	RIVET, 1/8" SS POP	24
26	5647D8	RIVET, 3/16" SS POP	21
27	5684D2	1/2" HOSE CLAMP	1
29	5827D1	FITTING, STREET ELBOW, 45 DEG, 1/4 NPT	2
30	5871b8	PLUG, VAC BOTTOM 2-1/2"	8
31	6025SHR	REEL CRAFT, BASE MOUNT	1
32	6027-1	RETAINER, ROLLER	1
33	6027-2	COVER, HOSE GUIDE	2
34	6027-3	ROLLER, HOSE GUIDE	4
37	8051G	BRACKET, MOTOR MOUNT	1
38	8055EM	MOTOR, ELECTRO 120V	2

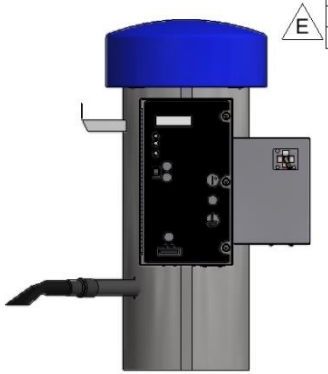

CONVERSIONS:
THIS UNIT CAN BE CONVERTED TO A PROTEL MONITORED CONTROLLER (ASY400)
WITH CREDIT CARD READER AND DUAL COIN MECHS.

REPLACE DOOR ASSEMBLY 9420-7A-DIG WITH 9420-17A-DIGV
REPLACE CONTROL ASSEMBLY 9420-16A & 8670KIT602-03 WITH 9420-16A-PP
REPLACE DOOR DECAL 9420FPD-DIGP WITH 9420FPD-3GDIGPV
REPLACE DOME 8306 WITH 8305PRO

REV	NO.	DESCRIPTION	DATE	BY
E	8393	8055LEAD-EM WAS 8221WH2, ADD B5997-001 & B5996-010	1/18/19	MWS
D	8010	REMOVED 5644D1	5-31-17	CK
C	7762	REMOVE B5996-010,B5997-001,8055LEAD-EM,8000-21,22,5639D4,5601D1, ADD 5601D13,5901D4,9500-56, NOTES	5/13/16	MWS
B	7471	ADDED (1) 8437D001	5-22-15	CK
A	7439	ADDED (1) 8000-21 AND (1) 8000-22	3-27-15	CK

TITLE: PROTEL DIGT AIR VAC W/VAL, GAST, REEL

UNSPECIFIED TOLERANCES: 1 PL ±.030; 2 PL ±.020; 3 PL ±.003; ANGLE ±1°

MATERIAL

DRAWN BY: CHAD K

DATE: 4/24/2014

SCALE

SHEET 1 / 2

CEDAR RAPIDS, IOWA

J.E. ADAMS INDUSTRIES, LTD

PART NO 9420-1GDIGPVH

REV. E

PART NO 9420-1GDIGPVH

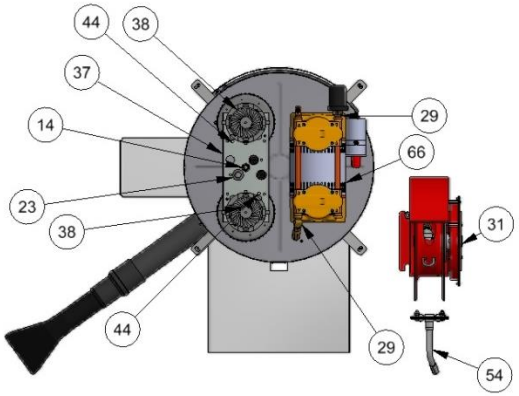

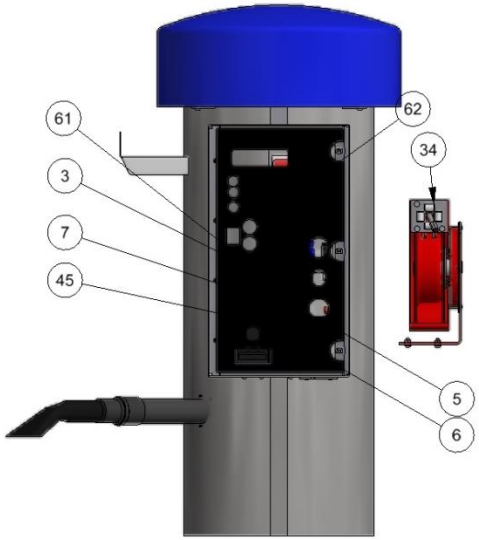

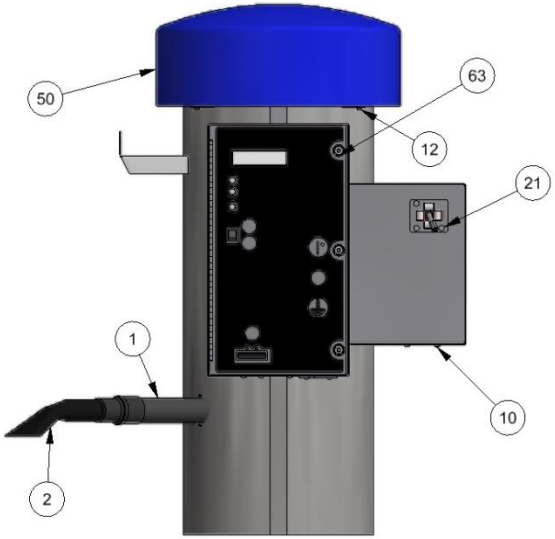

REV	NO.	DESCRIPTION	DATE	BY

THIS DOCUMENT SHALL NOT BE REPRODUCED NOR SHALL THE INFORMATION THEREIN BE USED BY OR DISCLOSED TO OTHERS EXCEPT AS AUTHORIZED BY J.E. ADAMS INDUSTRIES

TITLE: PROTEL DIGT AIR VAC W/VAL, GAST, REEL

UNSPECIFIED TOLERANCES	MATERIAL	CEDAR RAPIDS, IOWA
1 PL ± .030	DRAWN BY: CHAD K	J.E. ADAMS INDUSTRIES, LTD
2 PL ± .020	DATE: 4/24/2014	
3 PL ± .003	SCALE / SHEET 2 / 2	PART NO 9420-1GDIGPVH — REV. E
ANGLE ± 1°		

PART NO. 9420 SERIES

BILL OF MATERIAL

ITEM NO.	PART NO.	DESCRIPTION	QTY.

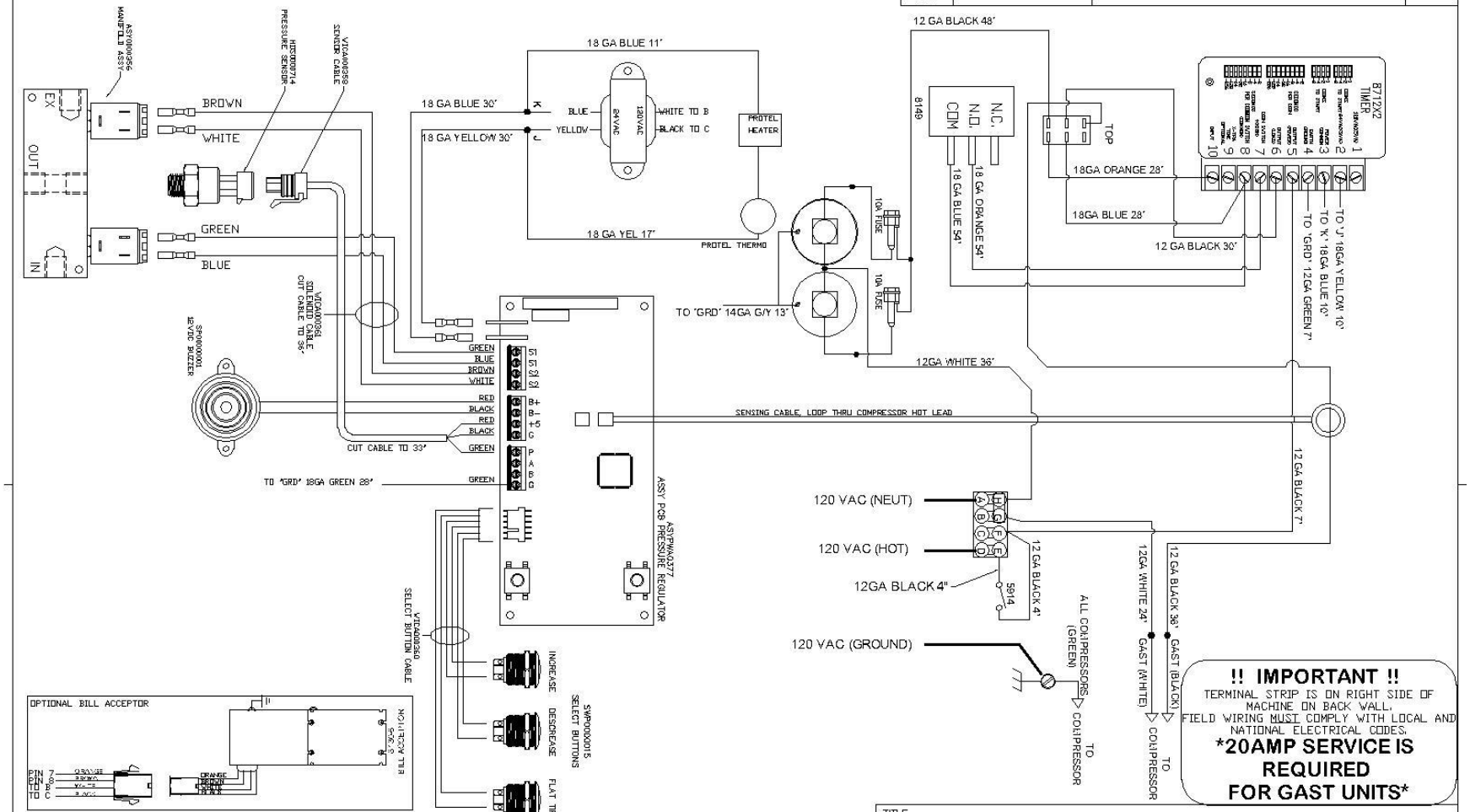

TITLE

9420 DIGI PROTEL SERIES

UNSPECIFIED TOLERANCES FRACT. ±1/32 2 PL ±.020 3 PL ±.010 ANGLE ±1.0°	SCALE NONE	CEDAR RAPIDS, IOWA J.E. ADAMS INDUSTRIES, LTD	
	DRAWN BY CK		
	DATE 8-21-13		
	REL. FOR PROD.	PART NO. 9420 SERIES	REV. C

REV	NO.	DESCRIPTION	DATE	BY
C	7802	CHANGED TIMER POWER FROM 120VAC TO 24VAC	8-4-16	CK
B	7590	ADDED NOTE FOR CABLE LENGTH 33" AND 36"	10-16-15	CK

PART NO. 9420 SERIES

BILL OF MATERIAL

ITEM NO.	PART NO.	DESCRIPTION	QTY.

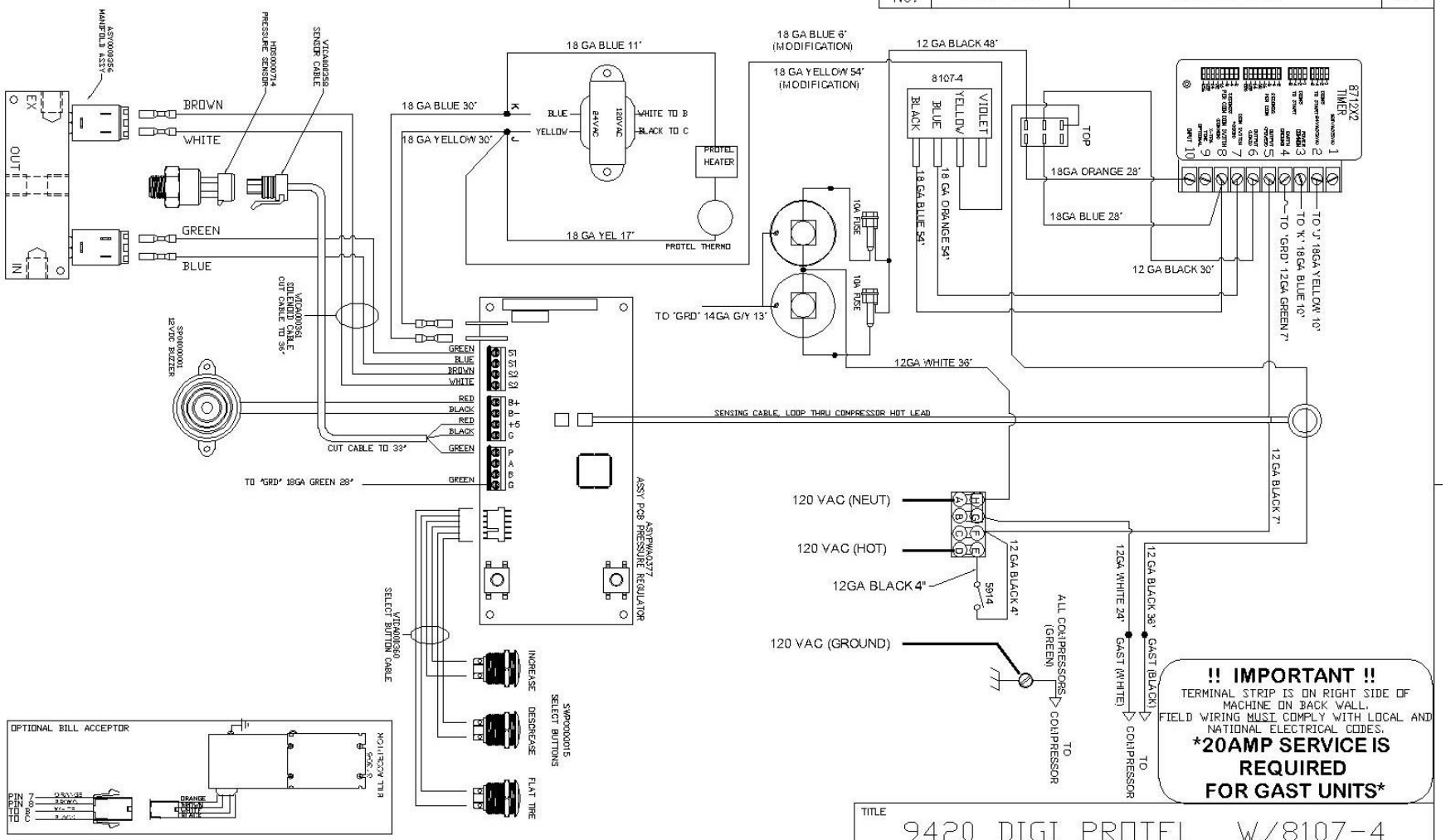

TITLE: 9420 DIGI PROTEL W/8107-4

C	7802	CHANGED TIMER POWER FROM 120VAC TO 24VAC	8-4-16	CK
B1	XXXXX	ADD DETAILS FOR CONNECTING 8107-4 COIN MECH	7/11/16	MWS
B	7590	ADDED NOTE FOR CABLE LENGTH 33" AND 36"	10-16-15	CK
REV	NO.	DESCRIPTION	DATE	BY

UNSPECIFIED TOLERANCES
FRACT. ±1/32
2 PL ±.020
3 PL ±.010
ANGLE ±1.0°

SCALE: NONE
DRAWN BY: CK
DATE: 8-21-13
REL. FOR PROD.

CEDAR RAPIDS, IOWA
J.E. ADAMS INDUSTRIES, LTD

PART NO. 9420 SERIES
REV. C

PART NO. 9420 SERIES

BILL OF MATERIAL

ITEM NO.	PART NO.	DESCRIPTION	QTY.

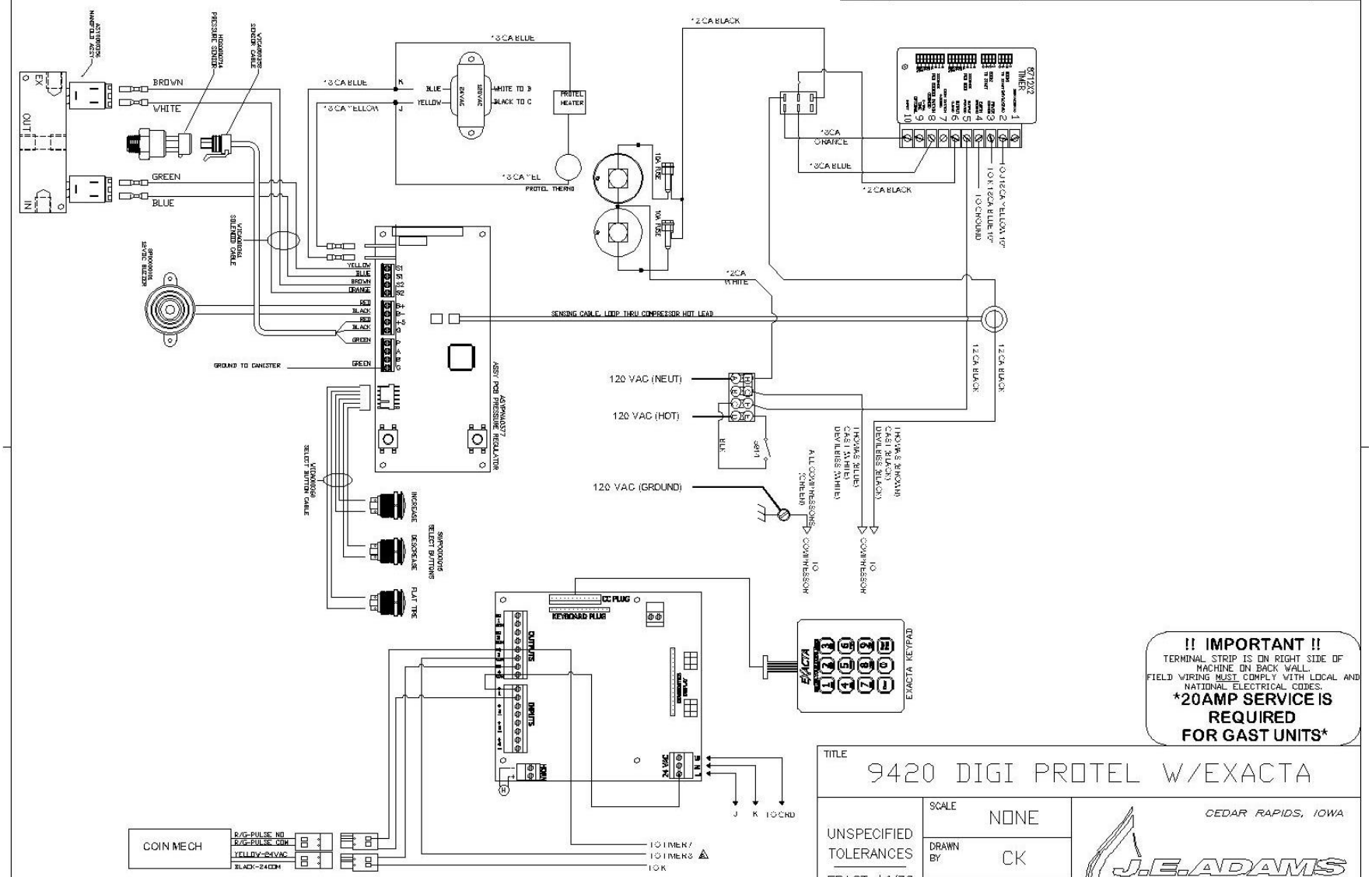

!! IMPORTANT !!
TERMINAL STRIP IS ON RIGHT SIDE OF MACHINE ON BACK WALL.
FIELD WIRING MUST COMPLY WITH LOCAL AND NATIONAL ELECTRICAL CODES.
20AMP SERVICE IS REQUIRED FOR GAST UNITS

TITLE: 9420 DIGI PROTEL W/EXACTA

UNSPECIFIED TOLERANCES
FRACT. ±1/32
2 PL ±.020
3 PL ±.010
ANGLE ±1.0°

SCALE: NONE
DRAWN BY: CK
DATE: 12-3-14
REL. FOR PROD.

CEDAR RAPIDS, IOWA
J.E. ADAMS INDUSTRIES, LTD

PART NO. 9420 SERIES
REV. B

REV	NO.	DESCRIPTION	DATE	BY
B	7802	CHANGED TIMER POWER FROM 120VAC TO 24VAC	8-4-16	CK